Powered by

BATTERY ®

TPL 121500A ▶ 12V 150Ah

TPL 121500A is a front terminal battery up to 12 years expected life under normal float charge As with all CSB batteries, all are rechargeable, highly efficient, leak proof and maintenance free.

MH14533

CSB-manufactured VRLA (**A**bsorbent **G**lass **M**at type) batteries are UL-recognized components under UL1989.

CSB is also certified by ISO 9001 and ISO 14001.

▶ Specification

Cells Per Unit	6
Voltage Per Unit	12
Capacity	159Ah @ 8hr-rate to 1.75V per cell @25 ℃(77℉)
Weight	Approx. 54.8kg(120.81 lbs)
Maximum Discharge Current	800A(5sec)
Internal Resistance	Approx. 3.9 m Ω
Operating Temperature Range	Discharge: -15℃~50℃(5℉~122℉) Charge: -15℃~40℃(5 ℉~104℉) Storage: -15℃~40℃(5℉~104℉)
Nominal Operating Temperature Range	25℃±3℃(77℉±5℉)
Float Charging Voltage	2.275±0.025V / Cell at 25 ℃ (77℉) Temp. Coefficient ±3.3mV/℃(±1.8mV/℉)
Recommended Maximum Charging Current Limit	45A
Equalization / Cycle Use Charging Voltage	2.45V Temps coefficient ±5mV/℃
Terminal	I2-Thread lead alloy recessed terminal to accept M6 bolt
Terminal Hardware Initial Torque	120-in-lbs.(13.58 N-m)
Container Material	ABS(UL94-V0) & (UL94-HB) / L.O.I higher than 28

▶ Dimensions :

Unit: mm (inch)

Overall Height (H)	Length (L)	Width (W)
323.0±2.5 (12.72±0.10)	547.0±2.5(21.54±0.10)	125.6±1.5 (4.94±0.06)

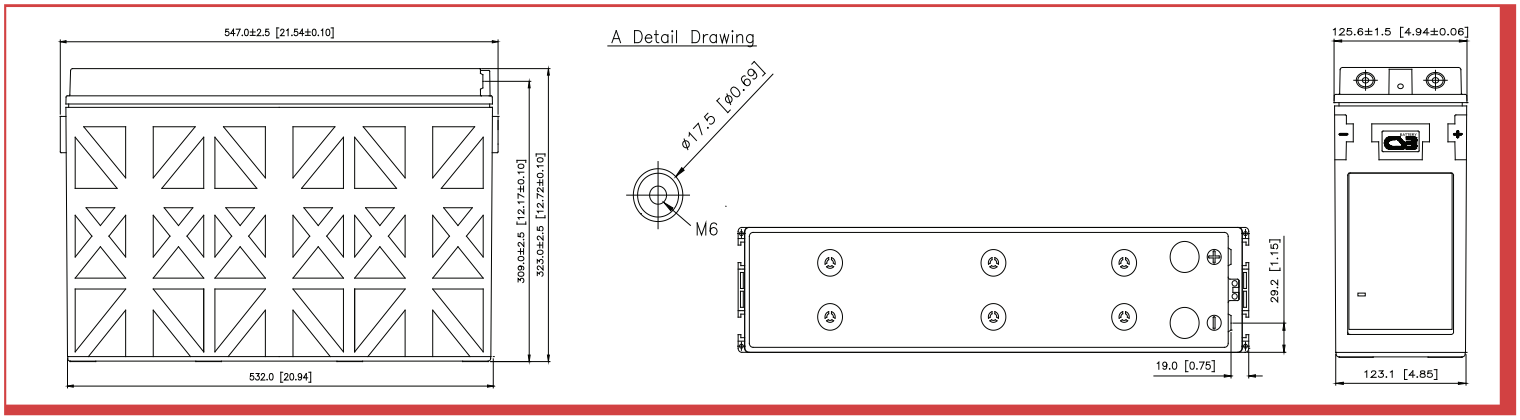

Constant Current Discharge Characteristics Unit:A (25℃,77℉)

F.V/Time	15MIN	30MIN	60MIN	90MIN	2HR	3HR	4HR	5HR	6HR	7HR	8HR	10HR	20HR
1.67V	264	174	106	77.6	62.2	45.2	36.3	30.7	26.2	22.8	20.1	16.5	8.77
1.70V	251	169	105	77.2	62.1	45.2	36.2	30.5	26.1	22.7	20.0	16.4	8.72
1.75V	223	162	101	74.5	60.0	44.3	35.5	30.1	25.8	22.6	19.9	16.3	8.67
1.80V	194	152	94.7	70.7	57.4	42.6	34.7	29.4	25.1	22.0	19.5	16.1	8.50
1.83V	172	144	89.4	67.4	55.1	41.4	33.9	28.8	24.7	21.3	18.9	15.6	8.34
1.85V	155	135	85.0	64.3	52.8	40.3	33.1	28.2	24.1	21.0	18.6	15.4	8.12
1.90V	149	106	69.9	54.9	46.2	36.5	30.4	25.8	22.1	19.1	17.0	13.8	7.47

Constant Power Discharge Characteristics Unit:W (25℃,77℉)

F.V/Time	15MIN	30MIN	60MIN	90MIN	2HR	3HR	4HR	5HR	6HR	7HR	8HR	10HR	20HR
1.67V	2672	1930	1223	897	720	529	425	358	305	269	237	195	104
1.70V	2582	1891	1200	884	711	521	420	357	304	266	236	194	103
1.75V	2354	1835	1154	856	692	517	417	356	302	263	234	191	102
1.80V	2113	1760	1092	821	670	505	410	353	301	260	233	190	101
1.83V	1870	1658	1034	784	644	488	402	339	291	255	226	186	99.0
1.85V	1849	1573	992	759	628	478	396	337	286	250	223	183	98.5
1.90V	1782	1281	852	664	557	436	369	309	263	228	204	167	91.1

Ratings presented herein are subject to revision without notice. Please refer to www.csb-battery.com to confirm the latest version.

RA:1607